| REV. | ECN NO. | MODIFIED MARK | APPROVED |
|---|---|---|---|
| A | ——— | FIRST RELEASE | |

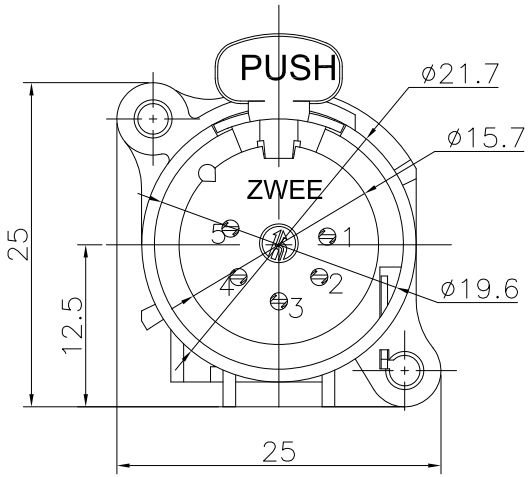


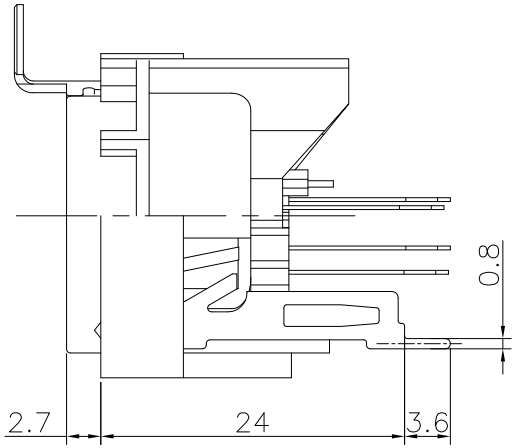


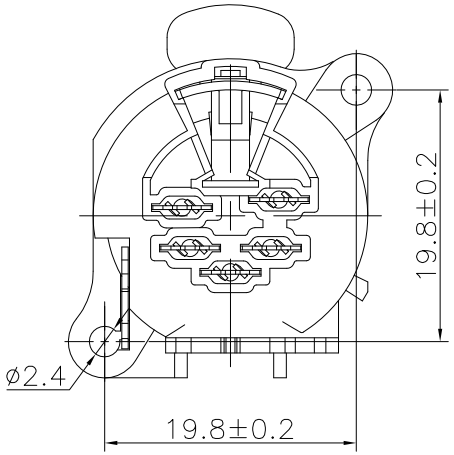


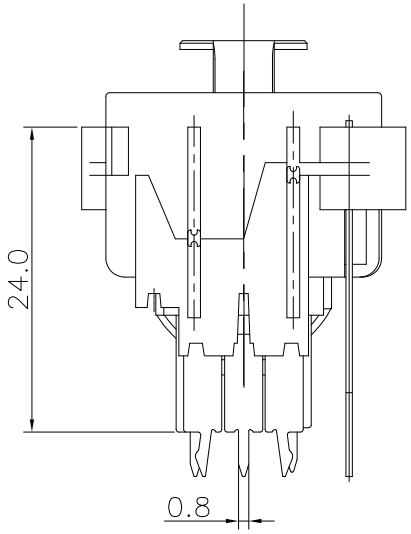


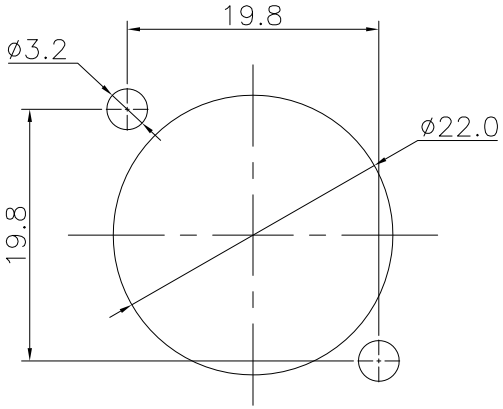


PCB LAYOUT
TOP VIEW

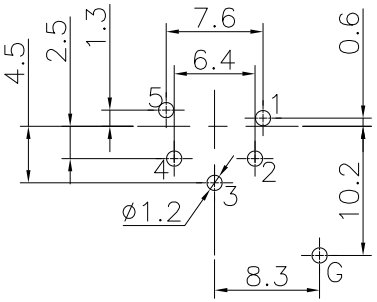


PCB LAYOUT
TOP VIEW

NOTES:
ELECTRICAL:
1:RATED CURRENT: 3A Max.
2:RATED VOLTAGE: 50V AC.
3:CONTACT RESISTANCE: 30 MILLIOHMS Max.
AFTER TESTING:60 MILLIOHMS Max.
4:INSULATION RESISTANCE: 1G OHMS Min.
5:DIELECTRIC WITHSTANDING VOLTAGE: 500 VAC Min.
MECHANICAL:
1:INSERTION FORCE: 5N–40N.
2:WITHDRAWAL FORCE: 5N–40N.
3:DURRABILITY: 1000 CYCLES.
ENVIRONMENTAL:
TEMPERATURE RANGE: –30°C TO 80°C.

| ANGLE | ±5° |
|---|---|
| 63 < L | ±0.5 |
| 16 < L ≤ 63 | ±0.4 |
| 4 < L ≤ 16 | ±0.3 |
| L ≤ 4 | ±0.2 |

TOL TABLE:

THIS DOCUMENT IS THE PROPERTY OF TRENPRO TECHNOLOGY CO. LTD.,NO PART THEREOF MAY BE REPRODUCED AND USED WITHOUT THE PRIOR WRITTEN CONSENT OF THE OWNER

MODEL NAME: SPF5–22
(PART NO.)

广东正宝科技有限公司
GUANGDONG TRENPRO TECHNOLOGY CO. LTD.

| | | | | | |
|---|---|---|---|---|---|
| MAT'L: See table | DESIGN: X.H.Wang 08/31'18 | TITLE: XLR CABLE CONNECTORS | | | |
| FINISH: See table | CHECKED: L.W.Wu 08/31'18 | DWG NO.: | | | REV.: A |
| Q'TY:/ | APPROVED: X.Q.Hu 08/31'18 | UNIT: mm | VIEW: | SCALE: 5:1 | SHEET: 1/1 | SIZE: A3 |