| REV. | ECN NO. | MODIFIED MARK | APPROVED |
|---|---|---|---|
| A | ——— | FIRST RELEASE | |

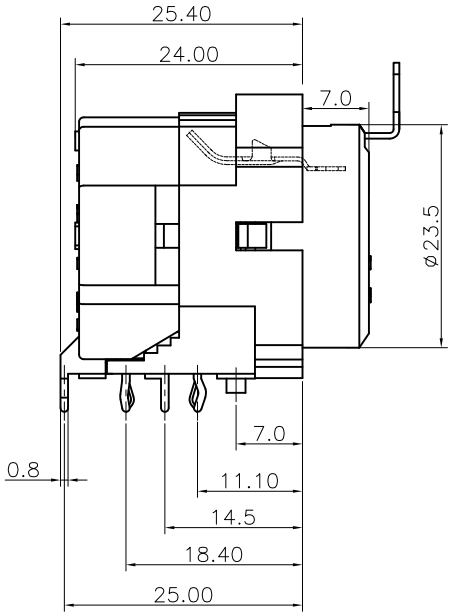


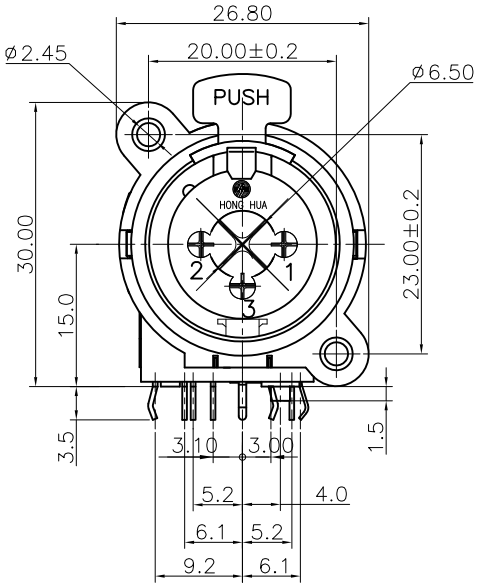


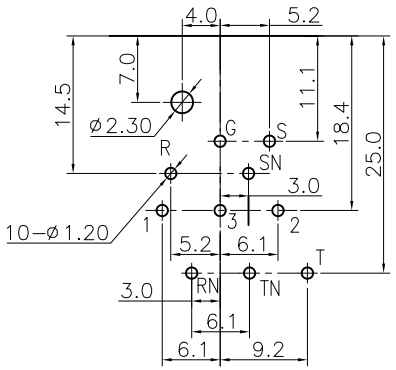


PCB LAYOUT

TOP VIEW

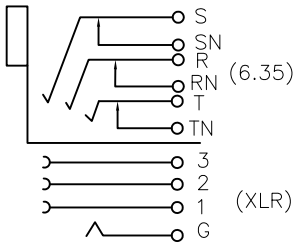


SCHEMTIC

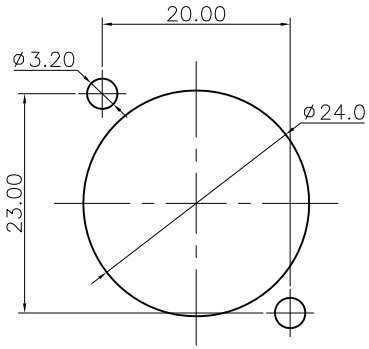


PANEL CUT OUT

NOTES:
ELECTRICAL:
1:RATED CURRENT: 7.5 A MAX.
2:RATED VOLTAGE: 50 V AC.
3:CONTACT RESISTANCE: XLR: 30 MILLIOHMS MAX.
JACK:30 MILLIOHMS MAX.
4:INSULATION RESISTANCE: 1 G OHMS MIN.
5:DIELECTRIC WITHSTANDING VOLTAGE: 500 VAC MIN.
MECHANICAL:
1:INSERTION FORCE: 5N~40N
2:WITHDRAWAL FORCE: 5N~40N.
4:DURRABILITY: 1000 CYCLES.
ENVIRONMENTAL:
TEMPERATURE RANGE: -30°C TO 80°C.

| ANGLE | ±5° |
|---|---|
| 63 < L | ±0.5 |
| 16 < L ≤ 63 | ±0.4 |
| 4 < L ≤ 16 | ±0.3 |
| L ≤ 4 | ±0.2 |

TOL TABLE:

THIS DOCUMENT IS THE PROPERTY OF TRENPRO TECHNOLOGY CO. LTD. ,NO PART THEREOF MAY BE REPRODUCED AND USED WITHOUT THE PRIOR WRITTEN CONSENT OF THE OWNER

| | | | | | | |
|---|---|---|---|---|---|---|
| MODEL NAME: (PART NO.) | SPC-16A-10P | 广东正宝科技有限公司 GUANGDONG TRENPRO TECHNOLOGY CO. LTD. | | | | |
| MAT'L: See table | DESIGN: X.H.Wang 08/14'18 | TITLE: XLR CABLE CONNECTORS | | | | |
| FINISH: See table | CHECKED: L.W.Wu 08/14'18 | DWG NO.: | | | | REV.: A |
| Q'TY:/ | APPROVED: X.Q.Hu 08/14'18 | UNIT: mm | VIEW: | SCALE: 5:1 | SHEET: 1/1 | SIZE: A3 |