REV.	ECN NO.	MODIFIED MARK	APPROVED
A	———	FIRST RELEASE	

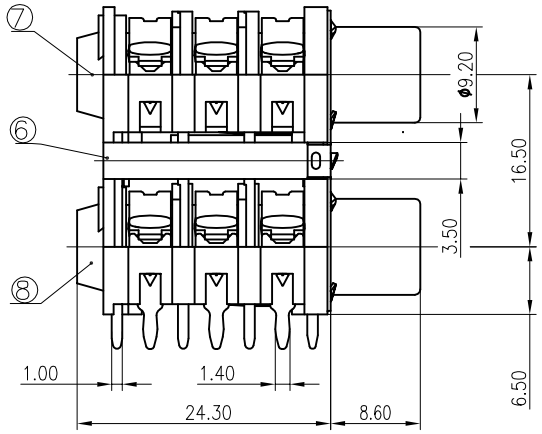

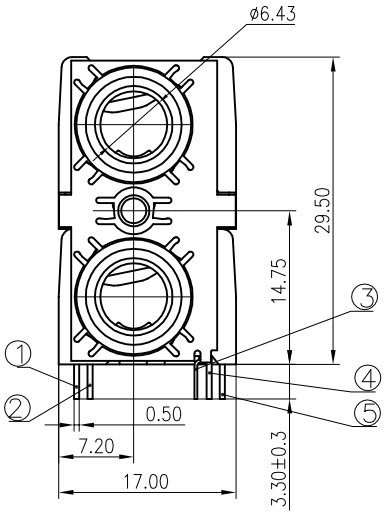

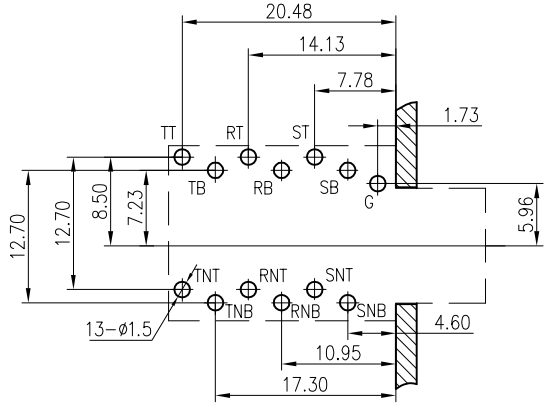

PCB LAYOUT
TOP VIEW

NOTES:
ELECTRICAL:
1:RATED CURRENT: 1A Max.
2:RATED VOLTAGE: 50V DC.
3:CONTACT RESISTANCE: 100 MILLIOHMS Max.
AFTER TESTING:100 MILLIOHMS Max.
4:INSULATION RESISTANCE: 100 MEGAOHMS Min.
5:DIELECTRIC WITHSTANDING VOLTAGE: 500 VAC Min.
MECHANICAL:
1:INSERTION FORCE: 5N-40N.
2:WITHDRAWAL FORCE: 5N-40N.
3:DURRABILITY: 5000 CYCLES.
ENVIRONMENTAL:
TEMPERATURE RANGE: -20°C TO 60°C.

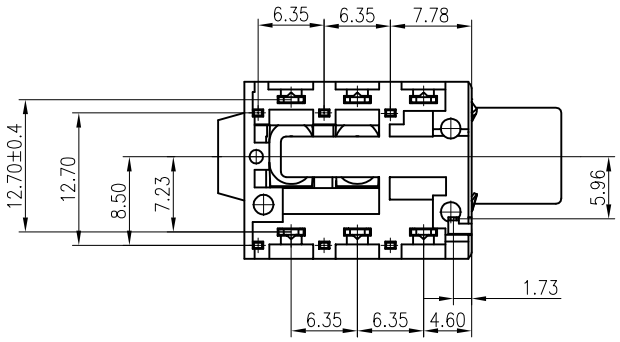

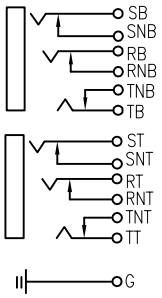

SCHEMATIC

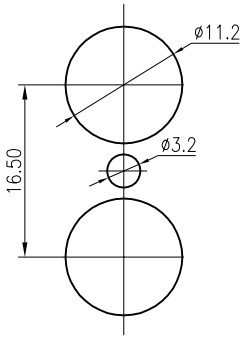

PANEL CUT OUT

NO.	PART NAME	Q'TY	MATERIAL	FINISH/COLOR	REMARK
⑧	HOUSE-2	1	PA66 G30	BLACK	RoHS2.0
⑦	HOUSE-1	1	PA66 G30	BLACK	
⑥	COVER	1	PA66 G30	BLACK	
⑤	TERMINAL-E	3	BRONZE t=0.5	Ag PLATED	
④	TERMINAL-D	3	BRONZE t=0.5	Ag PLATED	
③	TERMINAL-C	1	BRONZE t=0.3	CuSn PLATED	
②	TERMINAL-B	3	BRASS t=0.5	Ag PLATED	
①	TERMINAL-A	3	BRASS t=0.5	Ag PLATED	

ANGLE	±5°
63 < L	±0.5
16 < L ≤ 63	±0.4
4 < L ≤ 16	±0.3
L ≤ 4	±0.2

TOL TABLE:

THIS DOCUMENT IS THE PROPERTY OF TRENPRO TECHNOLOGY CO. LTD.,LTD.,NO PART THEREOF MAY BE REPRODUCED AND USED WITHOUT THE PRIOR WRITTEN CONSENT OF THE OWNER

MODEL NAME: SJ6360F-2BP-13P
(PART NO.)

广东正宝科技有限公司
GUANGDONG TRENPRO TECHNOLOGY CO. LTD.

MAT'L: See table	DESIGN: Z.F.Lian 11/30'18	TITLE: 6.35 PHONE JACK			
FINISH: See table	CHECKED: L.W.Wu 11/30'18	DWG NO.:			REV.: A
Q'TY:/	APPROVED: X.Q.Hu 11/30'18	UNIT: mm	VIEW:	SCALE: 5:1	SHEET: 1/1	SIZE: A3