REV.	ECN NO.	MODIFIED MARK	APPROVED
A	———	FIRST RELEASE	

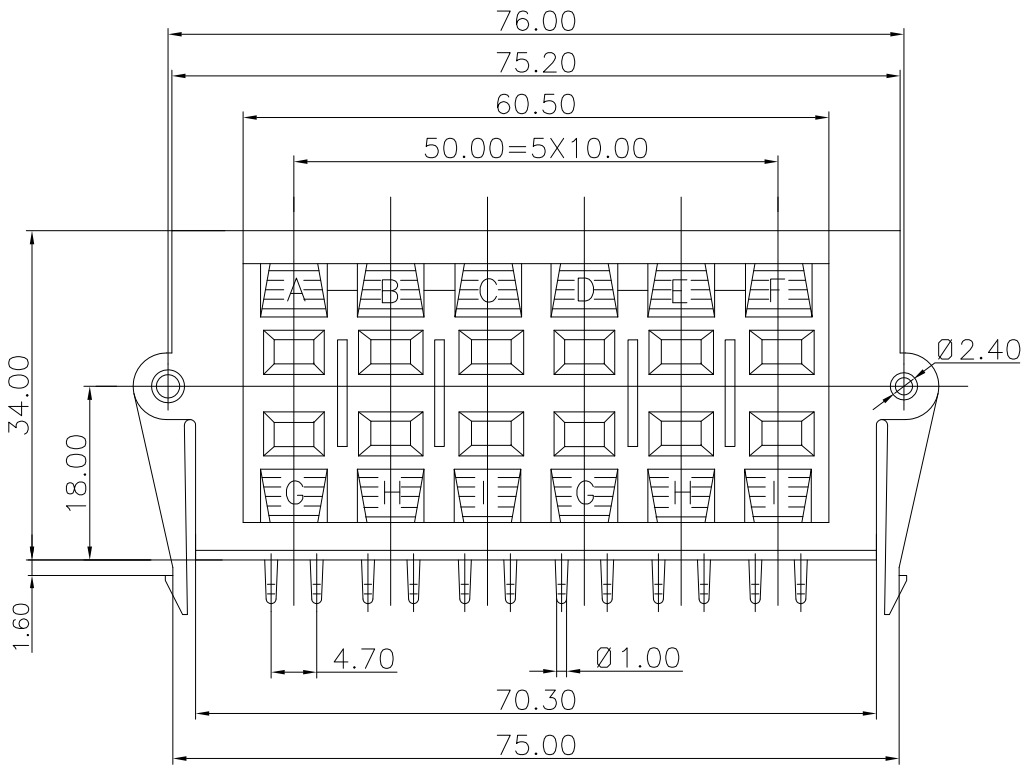

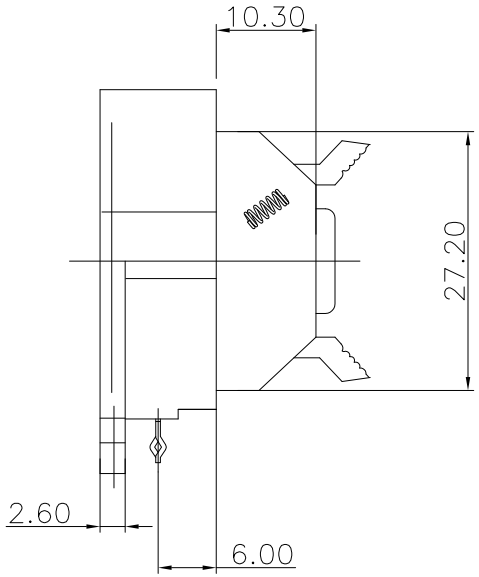

NOTES:
ELECTRICAL:
1:RATED CURRENT: 3A Max.
2:RATED VOLTAGE: 50V AC.
3:INSULATION RESISTANCE: 100 MEGAOHMS Min.
4:DIELECTRIC WITHSTANDING VOLTAGE: 1200 VAC Min.
MECHANICAL:
1:WIRE IN HOLD FORCE 5N (20#WIRE) MIN
2:INSPECTED VOLTAGE, AT THE SPEED OF 6-10S PER MINUTES, THE SAMPLES ARE INSPECTED 10000 CYCLES, BUT THERE ARE NO DAMAGE ON THE PRESSURE AND THE RISING TEMPERATURE, ETC.3:APPLY 2kgf FORCE AT ANY DIRECTION , THERE NO LOOSE & NO CRACK

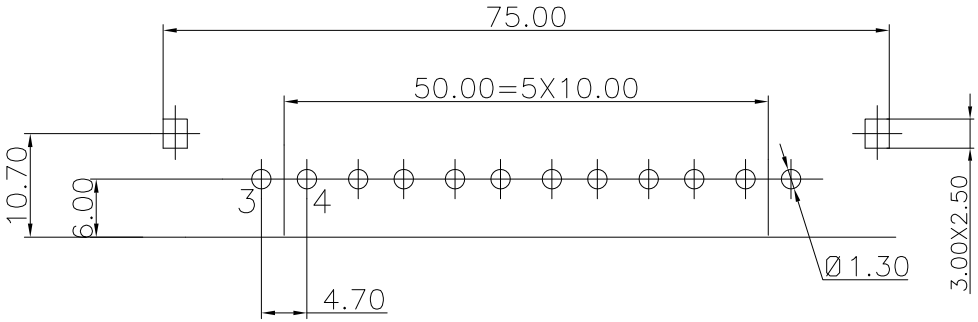

PCB LAYOUT
TOP VIEW

ANGLE	±5°
63 < L	±0.5
16 < L ≤ 63	±0.4
4 < L ≤ 16	±0.3
L ≤ 4	±0.2

TOL TABLE:

THIS DOCUMENT IS THE PROPERTY OF ZHENGWEI ELECTRONICS CO.,LTD.,NO PART THEREOF MAY BE REPRODUCED AND USED WITHOUT THE PRIOR WRITTEN CONSENT OF THE OWNER

MODEL NAME: WP12-13
(PART NO.)

广东正宝科技有限公司
GUANGDONG TRENPRO TECHNOLOGY CO. LTD.

MAT'L: See table	DESIGN: X.H.Wang 08/16'18	TITLE: WP PUSH TERMINAL				
FINISH: See table	CHECKED: L.W.Wu 08/16'18	DWG NO.:				REV.: A
Q'TY:/	APPROVED:X.Q.Hu 08/16'18	UNIT: mm	VIEW:	SCALE: 5:1	SHEET: 1/1	SIZE: A3